The FIATAGRI MEDIUM 90 SERIES

FIAT 55-90
FIAT 60-90
FIAT 70-90
FIAT 80-90

FIAT 55-90 dt
FIAT 60-90 dt
FIAT 70-90 dt
FIAT 80-90 dt

FIATAGRI

Comfort and Safety

The 55/60/70-90 series tractors are equipped with the Comfort cab. On the 80-90 series tractors you have the choice of either the Comfort or Super comfort cab. Both cabs are one-piece structures mounted on rubber pads to reduce vibration and comply with OECD standards for noise levels, and both comply with OECD standards for roll-over protection. And while both have been designed with the comfort and safety of the driver as the prime concern, the Supercomfort cab is a little more luxurious.

FEATURES OF BOTH CABS INCLUDE:

Heating and ventilation system. Hydrostatic steering operating from a separate circuit with a flow distribution pump. A new steering wheel full adjustable for driver comfort and control.

The floor is perfectly flat and uncluttered.

The Main control levers are fitted with special grips and arranged to make them even easier to reach. The function of each of the controls is shown by an instantly recognisable symbol.

The new instrument panel with 'Check Control' incorporates:

- Rev. counter, speed in top gear dial and 'PTO engaged' warning light.
- Fuel Gauge, Water Temperature Gauge, Restricted filter warning light.
- Differential lock indicators.
- Indicator for front-wheel drive engagement.
- Push button check on engine oil level before starting.
- Fully glazed access doors.
- Opening side and rear windows.
- Superb visibility.

Supercomfort cab

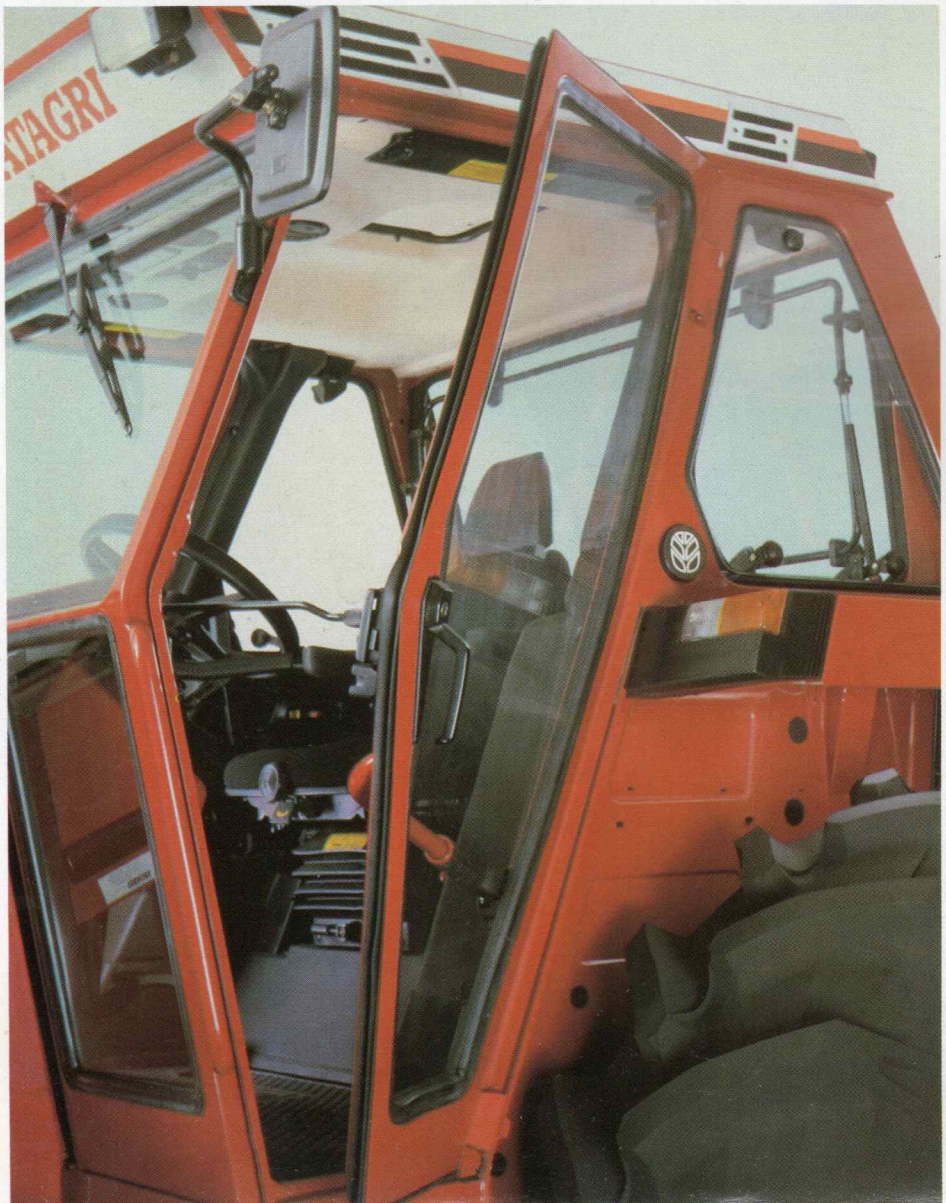

Special features of the supercomfort cab

New super-de-luxe upholstered seat with arm rests – fully adjustable to match the needs for every driver.

Safety Hatch, Half-open door check.

New washable interior upholstery in sound absorbing material. Tinted glass. Two-speed electric wiper.

Option:

Air-conditioning system with air filter.

The Medium 90 Engines

The engines used on the 90 series are new Fiat diesels designed to high safety standards over a wide range of applications. They are backed by Fiat's unrivalled experience in producing reliable, hard-wearing engines for the world market. Watercooled and with a direct-injection fuel system, these engines incorporate newly-designed cylinder heads with spiral air intake ducts. This shape gives a forced air supply that creates a powerful swirl effect and greatly improves the mixing process in the combustion chamber.
This means:

- Very low emission level.
- Lower fuel consumption, reducing operating costs.
- Good combustion at all speeds and engine loads.
- Constant power and performance

  plus
- Lower operating costs, due to standardised maintenance, repair operations and spares.
- Easy servicing, and easy access to all parts and components.

The new 4-cylinder Fiat diesels are also fitted with a built-in dynamic balancing device to cut out vibration and ensure smooth working at all speeds.

All these features add up to exceptional efficiency and further evidence of Fiat's technological leadership worldwide.

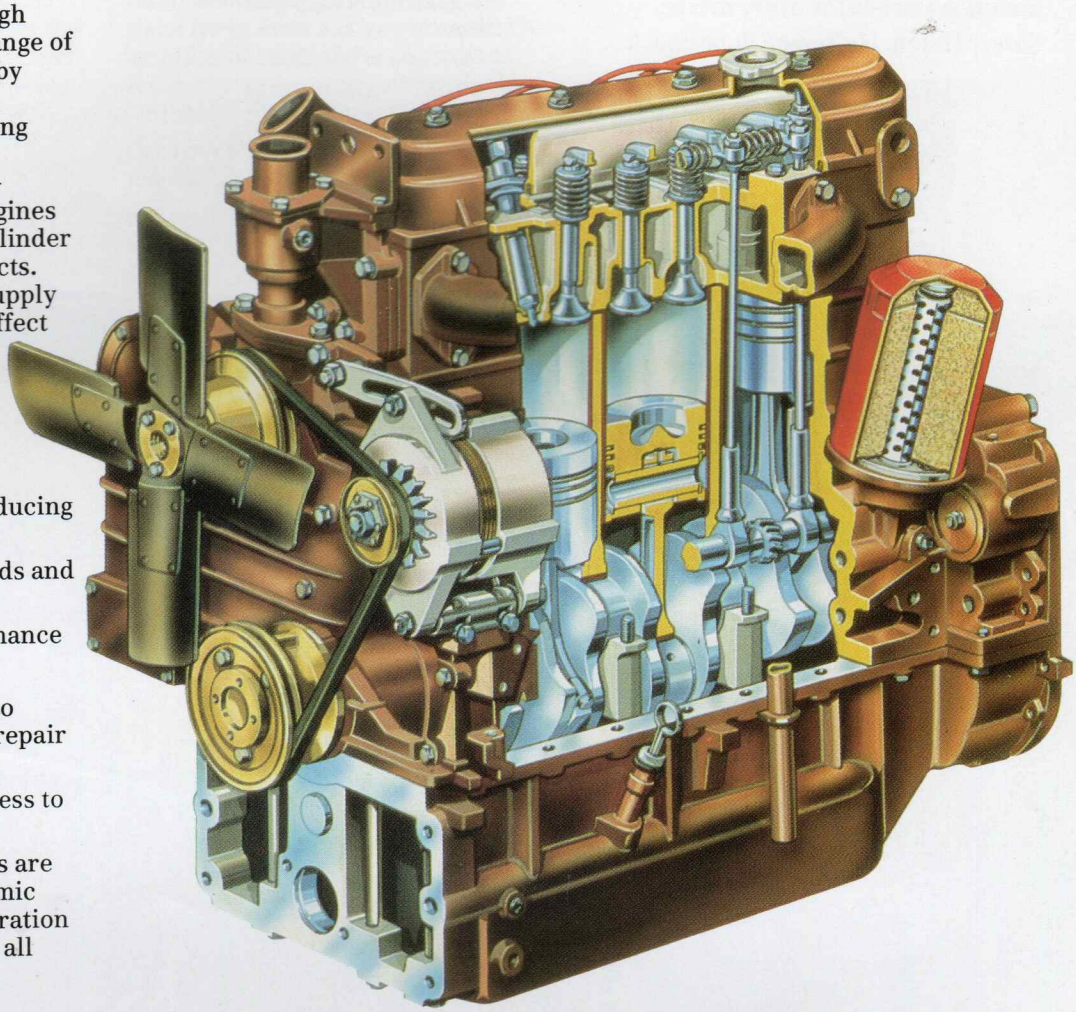

A RUGGED POWER UNIT
Flexible enough to tackle every job.

Tractor	HP DIN	FIAT Engine	No. of Cylinders	Bore mm		Stroke mm	Capacity cc
55-90	55	8035.06	3	100	X	115	2710
60-90	60	8035.05	3	104	X	115	2931
70-90	70	8045.06	4	100	X	115	3613
80-90	80	8045.05	4	104	X	115	3908

Clutch

dual plate with separate controls:

- Pedal, for the transmission.
- Hand lever, for the PTO

with full independent operation.
Plate diameter 11″.

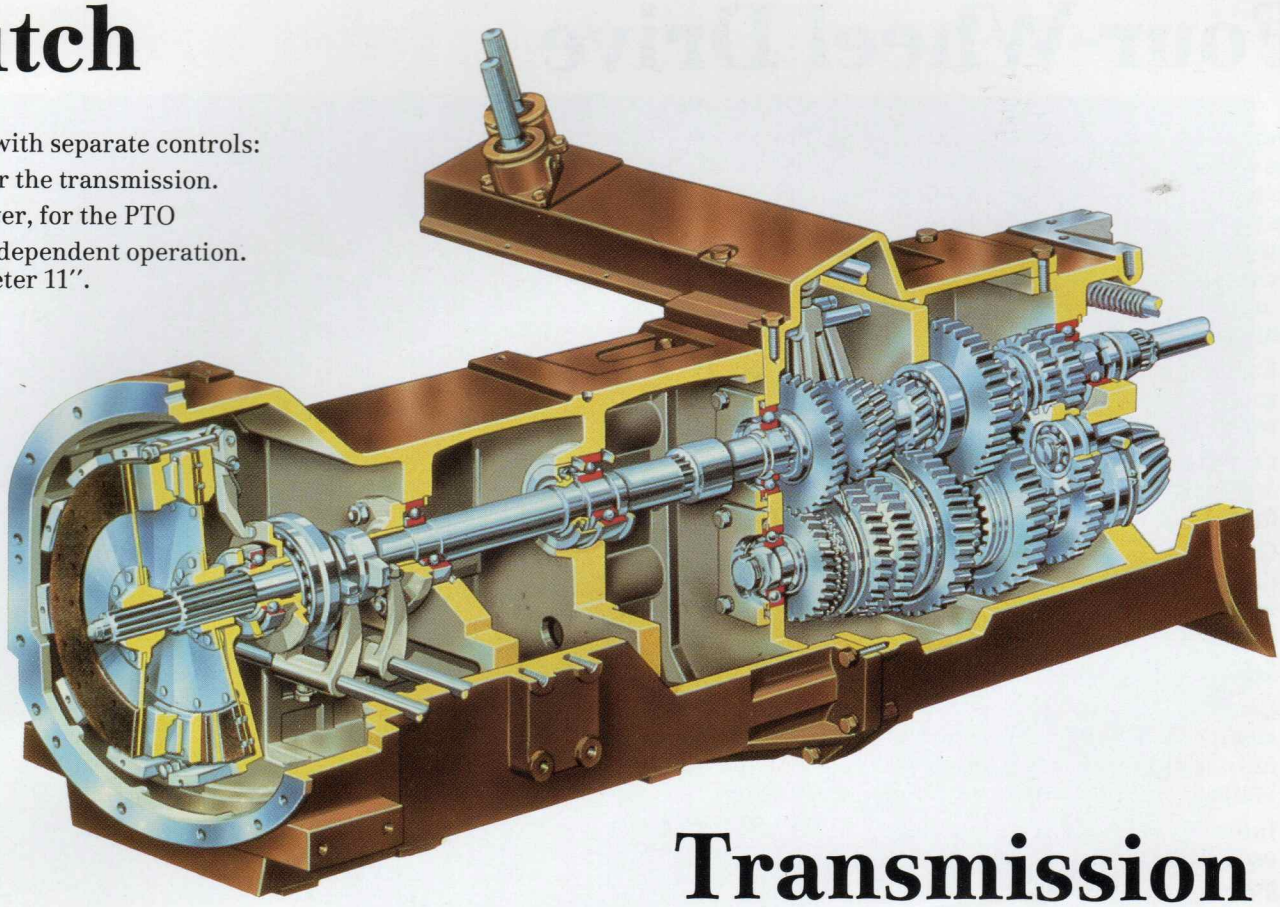

Transmission

The new medium 90s are fitted with four transmission options offering a full coverage of specific needs.

Standard gearbox

12 Forward + 4 Reverse, fully synchronised, with overlapping ranges.

Options

24 Forward + 8 Reverse, including a super-reduction unit for creeper speeds. Also fully synchronised, with overlapping ranges.

This transmission offers a range of creeper speeds that enable the full power output of the engine to be utilised through the PTO, particularly trench-diggers or special harvesting machinery.

12 Forward + 12 Reverse, with mechanical reverse gear.

This transmission also uses overlapping ranges and offers a range of speeds suitable for every type of job. The mechanical reverse gear is ideal for where frequent changes of direction are required.

Hi-Lo. 24 Forward + 12 Reverse.

Available only on the 70-90DT and 80-90DT, symbolised by the words Hi-Lo and a hare decal on the engine side panels, this transmission provides clutchless shifting between Hi and Lo speeds on the 12 forward gears. A new synchromesh facilitates easy forward reverse shifting. Hi-Lo tractors have a faster road speed of nearly 40 kph and are fitted with a front axle braking system and front fenders as standard equipment.

Overlapping gear ranges have a number of important advantages. They especially assist in the 'take-off' torque an engine has to provide when starting to overcome inertia and work up to the rated running speeds

The gears in each transmission have helical teeth for correct load distribution and to reduce noise. All other transmissions have a top road speed of 30 kph.

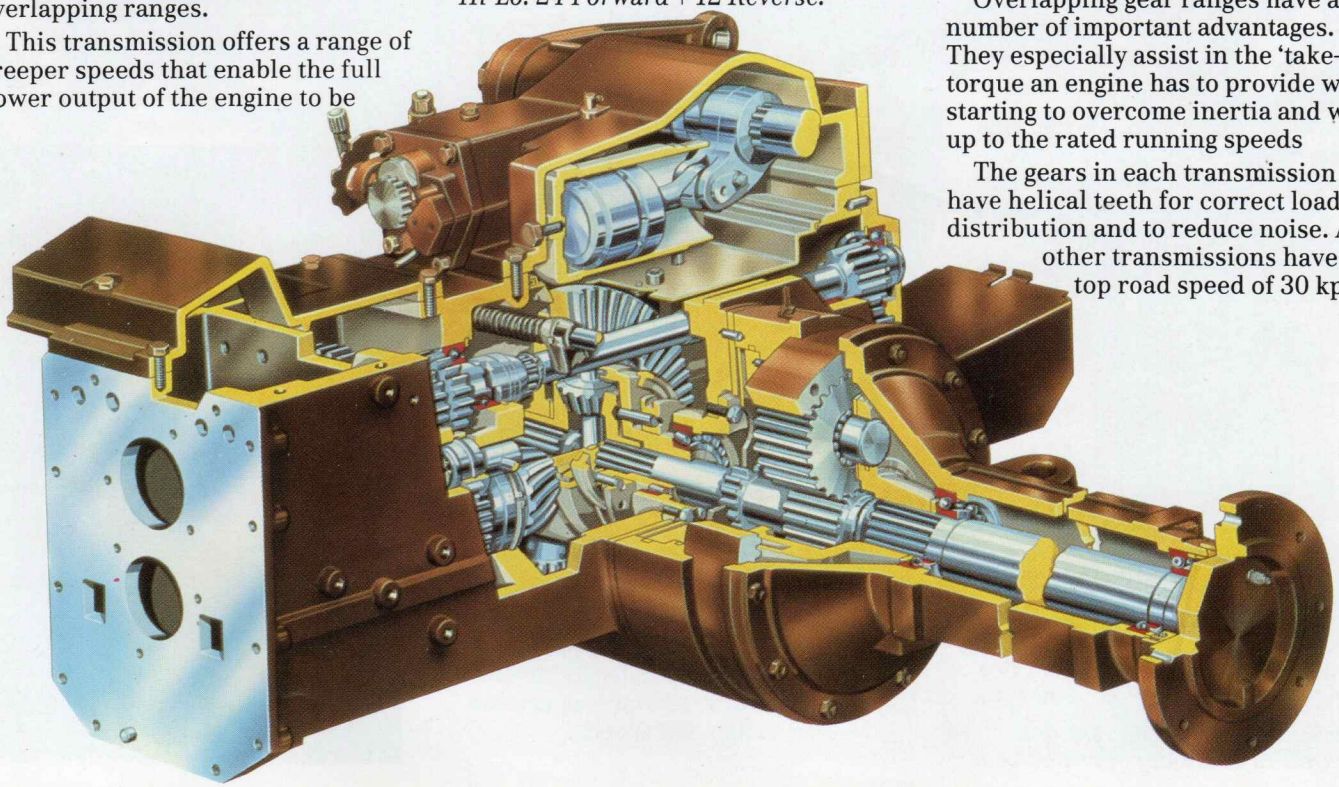

Four-Wheel Drive

Four-wheel drive has always been one of Fiat Trattori's strengths, and the company has for many years been the world's leading manufacturer of four-wheel drive tractors. Technological innovations have resulted in the following outstanding features:

- Exellent front wheel grip, due to good weight distribution and a long wheelbase.
- Compact, large sized epicyclic final drives housed in the wheel hubs for easy access.
- Greater flotation. The option of fitting large-diameter, very wide wheels, for greater flotation and less ground pressure.
- Multiple front wheel track settings.
- Centrally-mounted transmission shaft, coaxial with the gearbox, fully protected, with no universal joints.
- Integral cast front axle, with full oscillation to cope with uneven ground.
- Centrally mounted, compact front differential, with helical gears for more efficient operation and better ground clearance.
- 70-90DT and 80-90DT tractors have automatic No-Spin differential lock, twin power steering rams and 50° steering angle for a tight turning circle.

The No-Spin is locked during normal straight running to allow full power to both front wheels. In the event of insufficient ground grip, or when going round corners, the speed-sensitive No-Spin disengages to allow the faster turning front wheel to idle. The unit transfers the full torque to the other wheel. When both wheels are travelling at the same speed the no-spin differential unit re-engages automatically, and the full torque is again passed to both wheels. This system offers several advantages, such as:

- Less tyre wear.
- Uses all available power, all the time.
- Constant grip and traction values.
- An automatic unlocking and re-locking differential system.

Each model in the range has been designed and built to handle all the jobs it will be expected to do, but if a particular kind of work makes it necessary, stability can be improved by adding ballast to either the front axle or the rear wheels.

Brakes

The Medium 90s are fitted with oilbath disc brakes that are hydrostatically operated. The service brakes are applied by means of two separate, newly-designed pedals that can be joined together. There is also a fully independent, hand-operated, parking and emergency disc brake on the transmission shaft.

- Hi-Lo transmission versions are also equipped with front axle brakes.

Differential

Located in the rear axle, two planetary pinions. Pedal actuated differential lock.

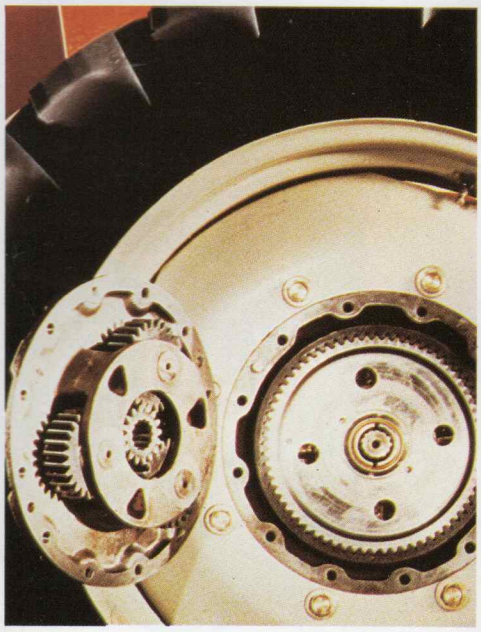

PTO

Engine and Ground Speed PTO, fully independent operation. Engagement through single 11″ plate manually operated clutch integral with the transmission clutch. Available in two versions: 540 rpm and 540/1000 rpm.

With the two-speed version, the changeover is manually operated by a lever mounted on the back of the gearbox.

A Ground Speed PTO is particularly effective when using machines, like seed drills and manure spreaders, whose effective operation is related to forward speeds.

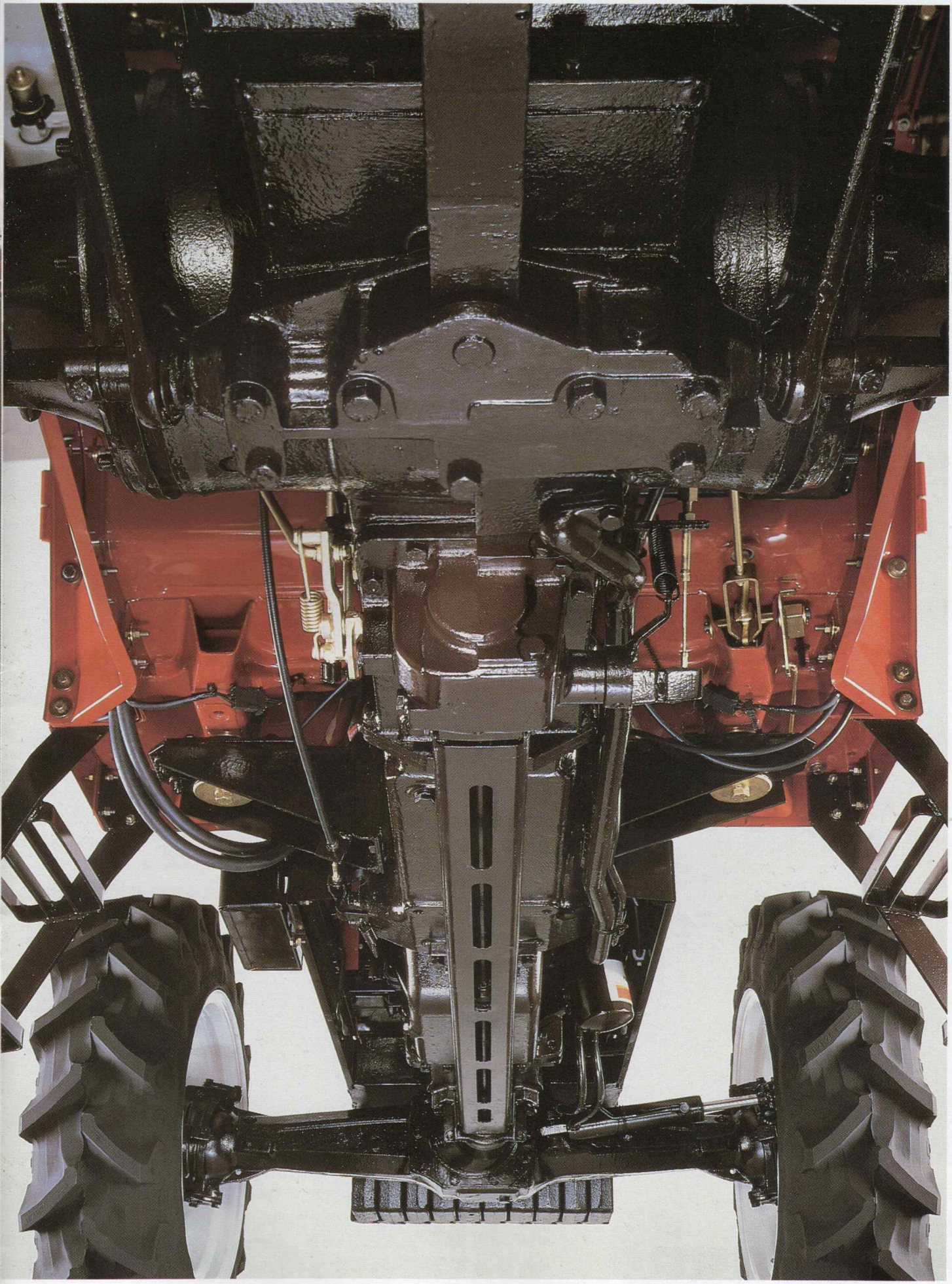

Hydraulic Lift

With draft, position and mixed control. The draft control operates through an oilbath flexion bar housed inside a separate assembly mounted under the rear part of the transmission. The hydraulic system is an original Fiat design and monitors operation of the implement under all conditions, even under varying loads and soil resistances.

There are two hydraulic control systems for selection according to the type of ground and implement. The lift is operated by two levers that allow the implement to be positioned for any type of job, and is fitted with a three-point linkage: cat. 1-2 (for the 55 and 60-90), cat. 2 (for the 70 and 80-90), with lower links complete with chainsway restrictors and spring (55 and 60-90) and adjustable sway restrictors (70-80-90).

A new control – the LIFT-O-MATIC is on the right-hand side level with the driver's seat. This provides automatic lifting or lowering of the lower links without having to restore the setting of the draft or position control levers and so simplifies turning at headlands. It is also possible to operate the position of the linkage while standing at the rear of the tractor.

Good lifting capacities 2900 kg (55 and 60-90); 3500 kg (70 and 80-90) and excellent implement control makes this a versatile and very functional system.

An innovative feature, throughout the entire range, is a newly designed one-piece body, housing both the hydraulic cylinder and cross-shaft. A special control valve with flanged attachment, easily removable, is used to control the sensitivity and rate of descent of the lower links. Up to three auxiliary control valves, convertible for single or double acting, can also be mounted for implement remote control, with provision for quick coupling under pressure. These are attached direct to the transmission housing instead of the platform to reduce noise in operation.

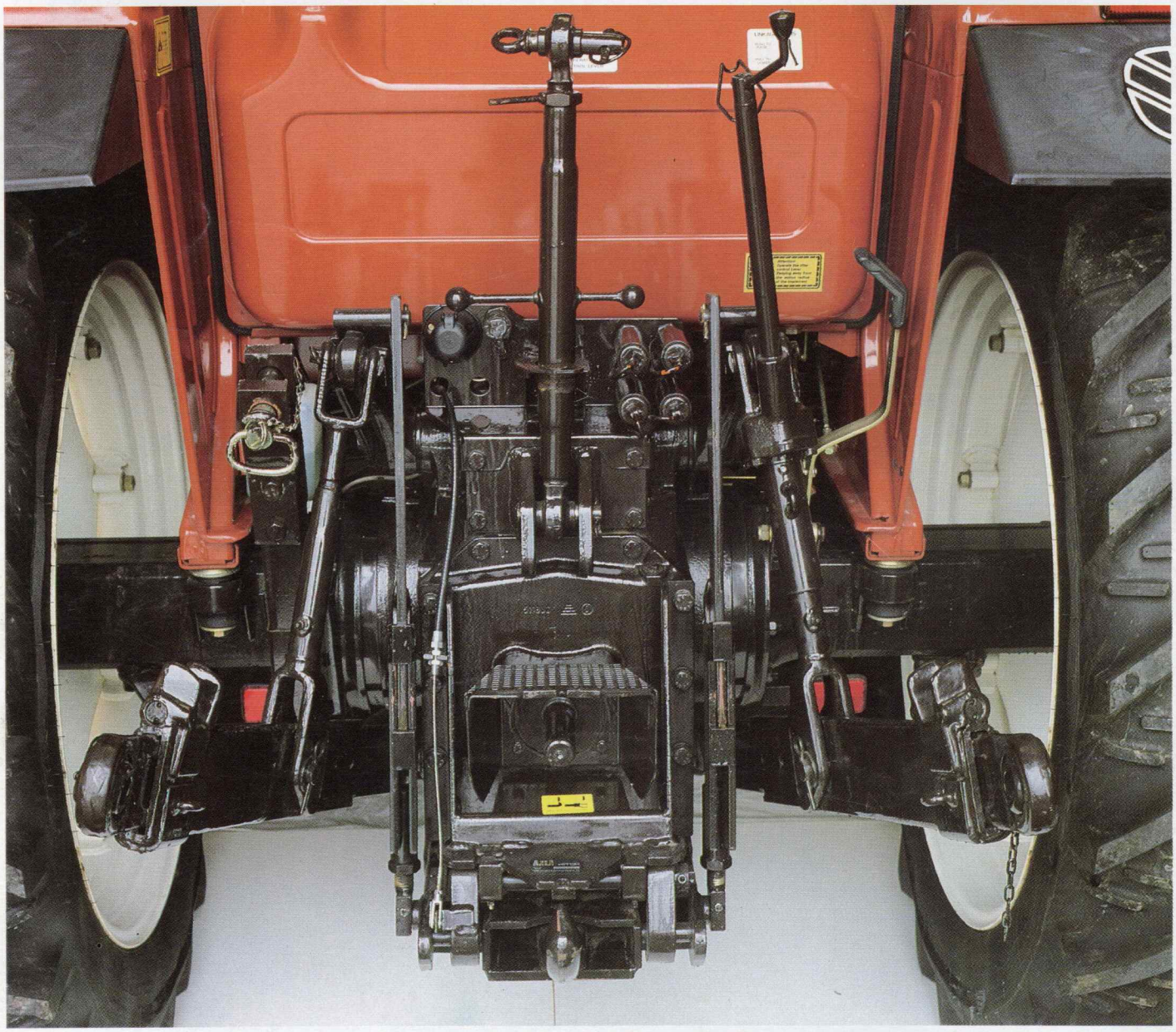

The information contained in this leaflet is intended to be of a general nature only.

Fiatagri may at any time and from time to time, for technical or other necessary reasons, modify any of the details or specifications of the product described in this leaflet.

To be sure of getting accurate, detailed and up-to-date information, an intending buyer should consult his nearest dealer.

FIATAGRI

Fiatagri UK Ltd, Newmarket Road, Bury St Edmunds, Suffolk IP33 3YA.
Telephone: Bury St Edmunds (0284) 68441. Telex: 81209.

Printed by Fuchsia Print and Publicity Services Ltd, Gt Dunmow, Essex. FPS/88 63